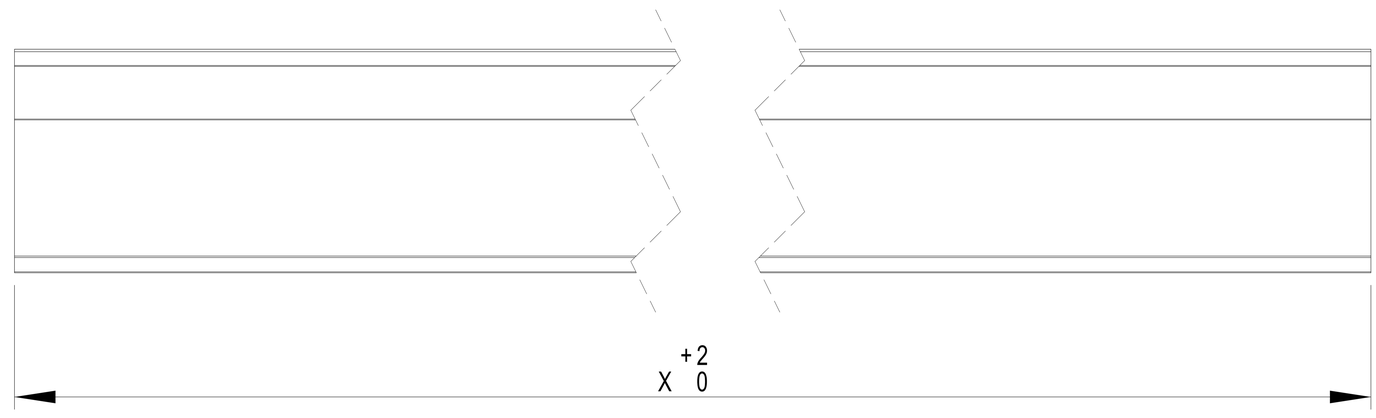

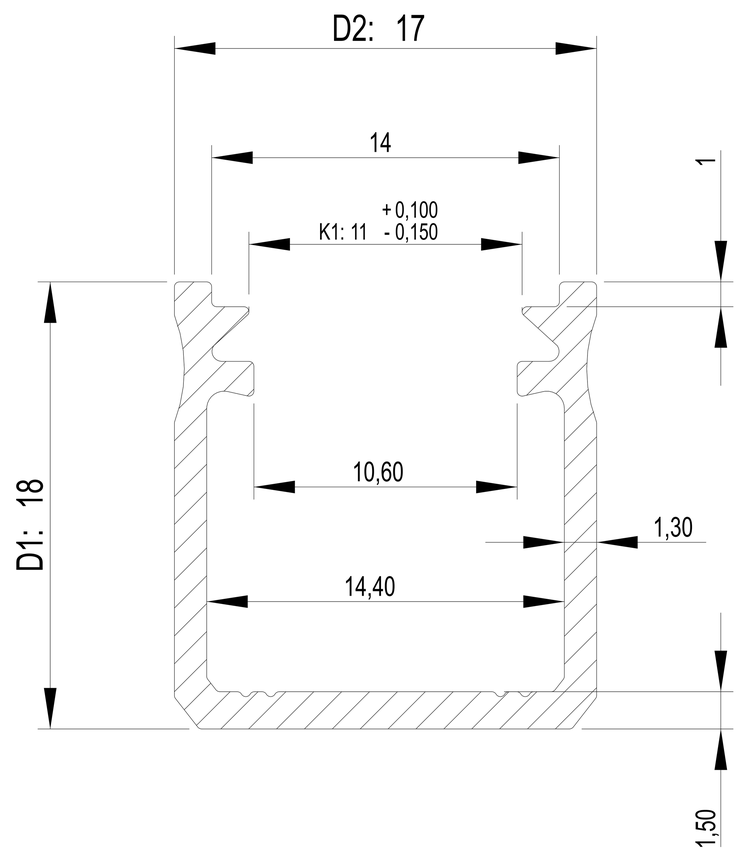

LUMINES LIGHTING

QC

Standard EN 12020-2

	First name last name	Signature	Date
Drawn by.			
Checked by.	G.Trzcielinski		
Approved by	G.Trzcielinski		

Title

Y - PROFILE

INDEX 10-0094-XX

Drawing number.

A4

Weight

Scale 2:1

Sheet