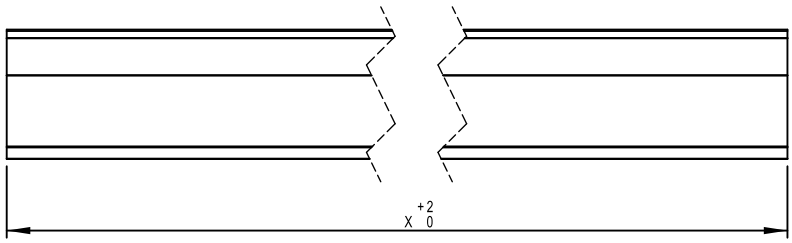

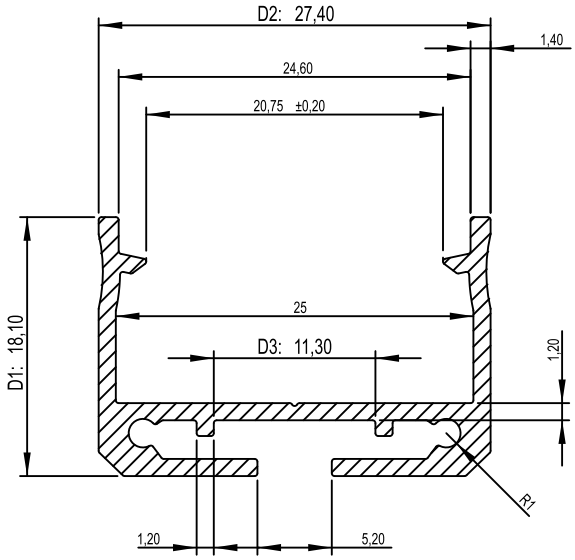

	First name last name	Signature	Date			
Drawn by.						
Checked by.	G.Trzcielinski					
Approved by	G.Trzcielinski					

LUMINES® LIGHTING

QC

Standard EN 12020-2

Title

SILEDA

INDEX 10-0334-XX

Drawing number.

A4

Weight

Scale 2:1

Sheet