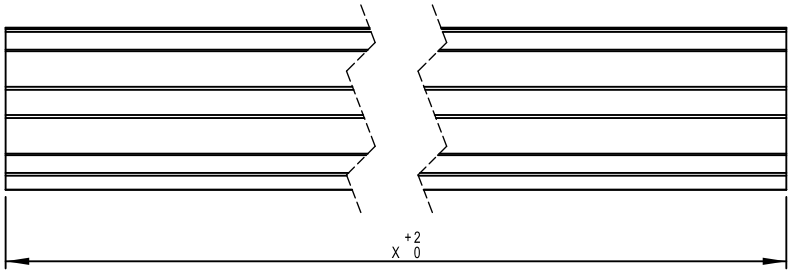

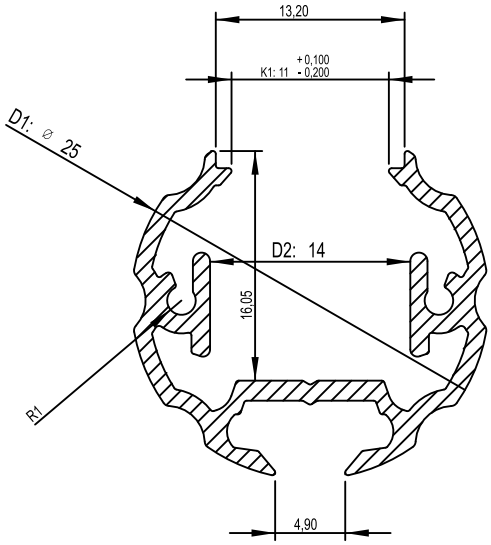

						QC	Standard EN 12020-2
	First name last name	Signature	Date				Title COSMO
Drawn by.							
Checked by.	G.Trzcielinski						
Approved by	G.Trzcielinski						
				INDEX 10-0174-XX			Drawing number. A4
				Weight			Scale 2:1 Sheet